Trench Type Wet Well Designs

Minimize your footprint and your maintenance headaches

April 16, 2019

Presentation Objectives

- Introduction to Trench Type Wet Wells
- Introduction to Self Cleaning Operation
- Case Studies
  - Return Activated Sludge Pump Station
  - WWTP Influent Pump Station
  - WTP Pump Station
  - Lift Station
- Would the design be right for you?

Trench Type Wet Well

- Invented by D.H. Caldwell in 1964
- Improved by Dr. Robert Sanks, Ph.D., P.E.
  - 1:1 scale model of portion of trench floor
    - Result: >5 fps requirement
  - 1:3.3 scale model of the Kirkland Pump Center
    - Result: Only a **small** portion of the sand was ejected at pump down equilibrium.
- 1998 Breakthrough
  - 2nd Edition of Pumping Station Design
  - ANSI/HI 9.8 Pump Intake Design

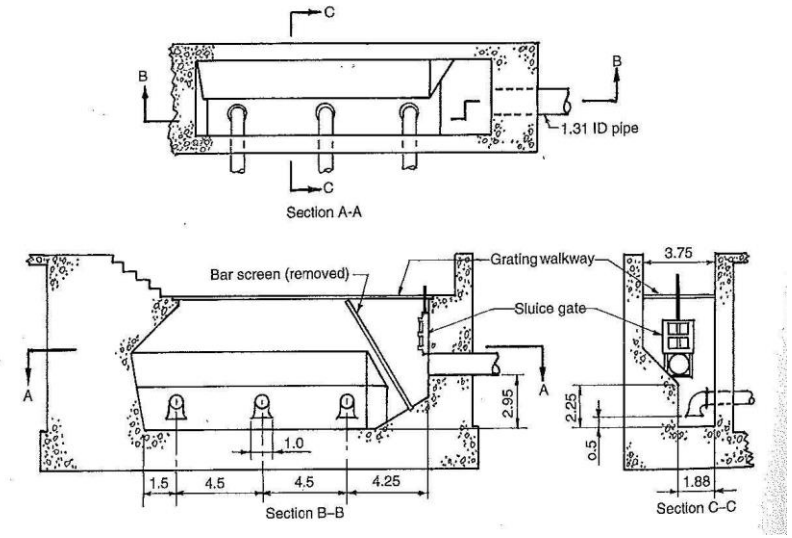

Illustrative View of Kirkland Pump Station (Washington)

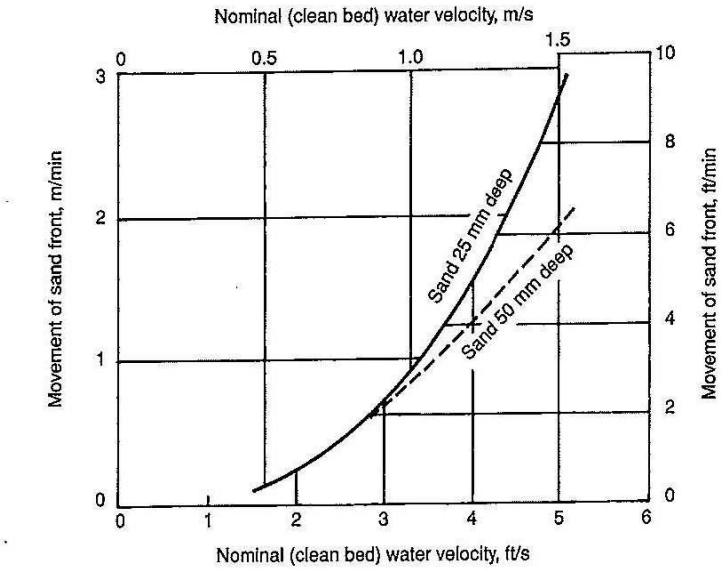

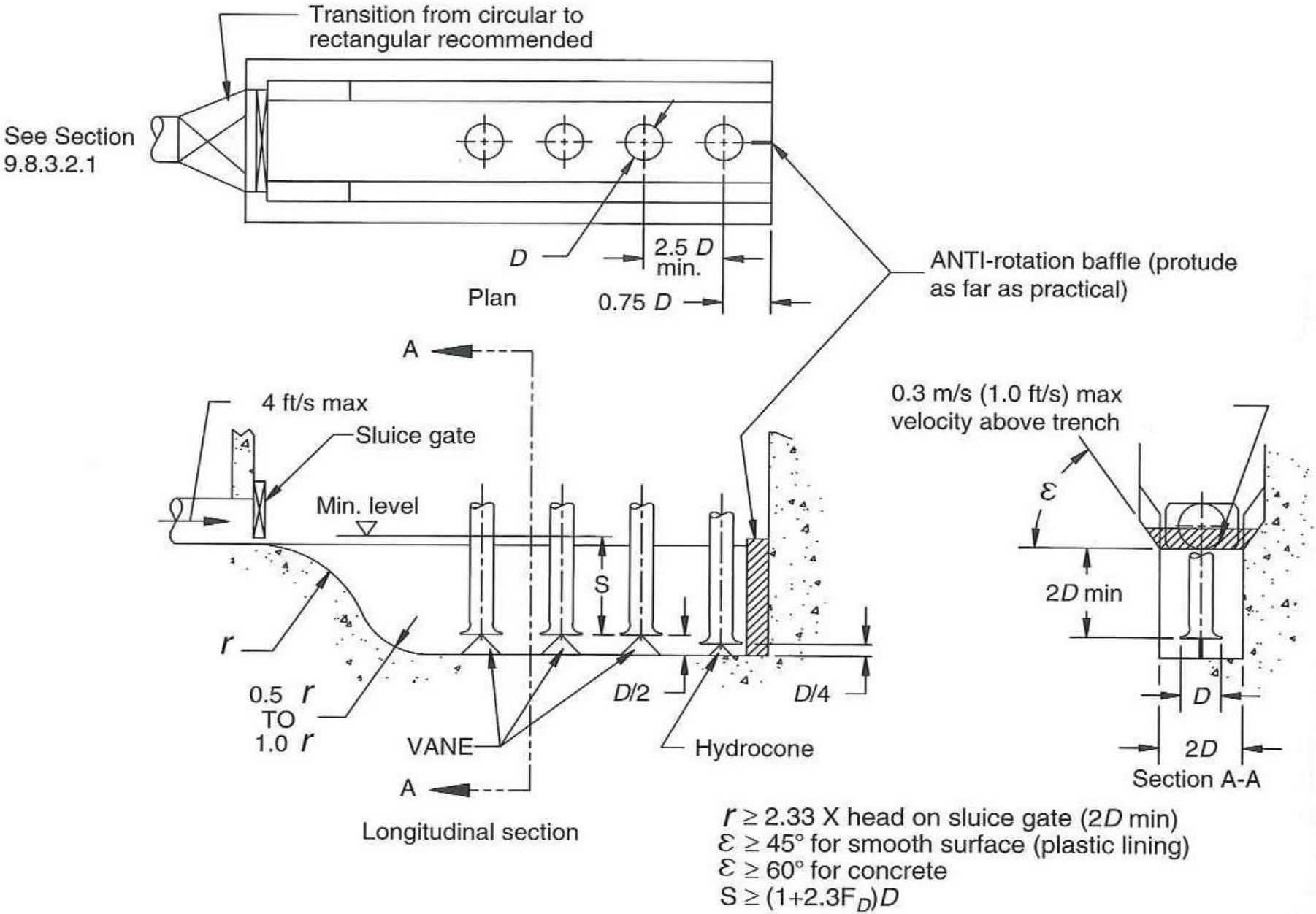

ANSI/HI 9.8 Pump Intake Design (1998)

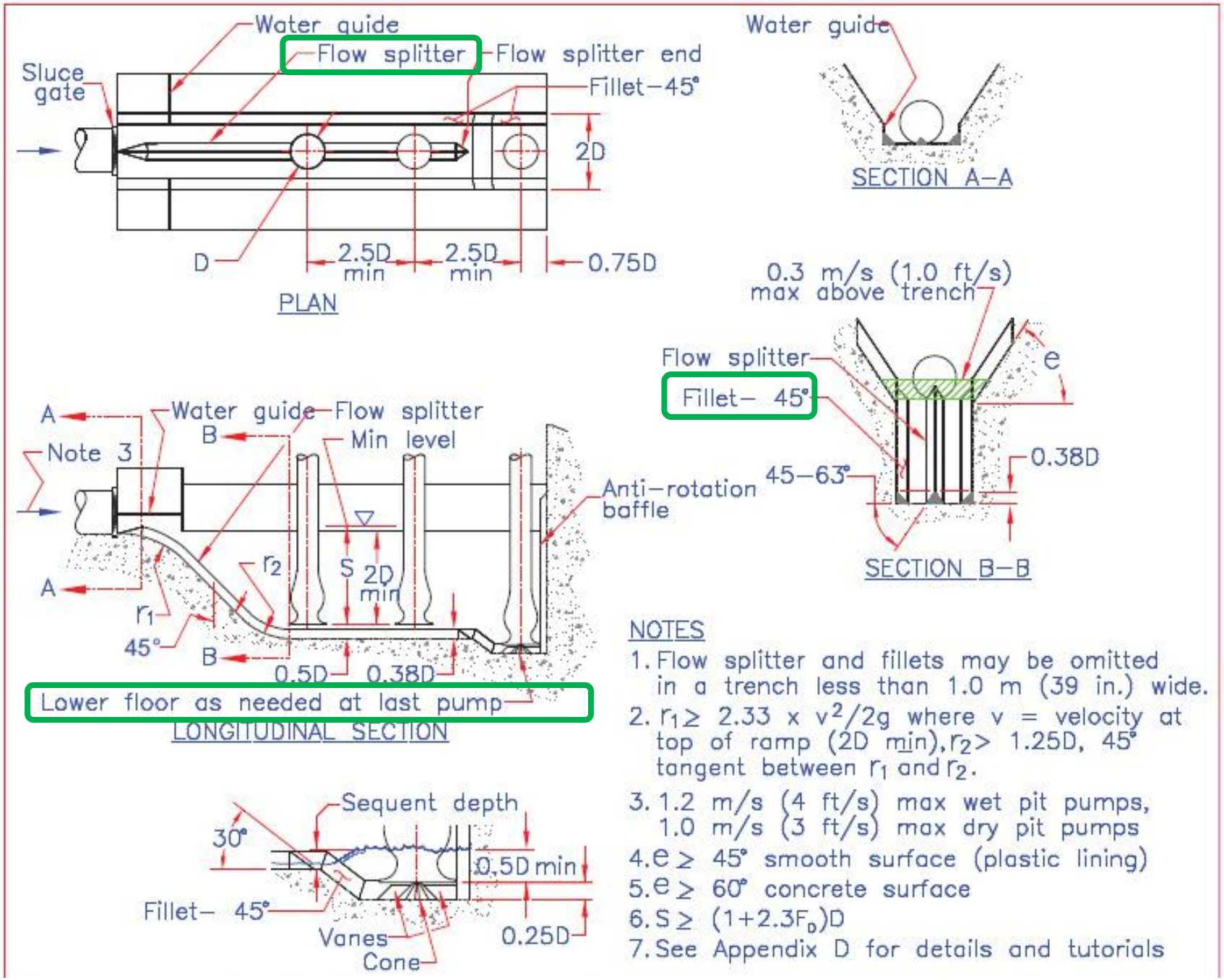

ANSI/HI 9.8 Pump Intake Design (2012)

Trench Type Wet Well

- Suitable for Design Flows > 3 MGD
- Pump Intakes, Confined in a Deep, Narrow Ditch
- Pump Intakes, Substantially Lower Than Upstream Inlet Pipe

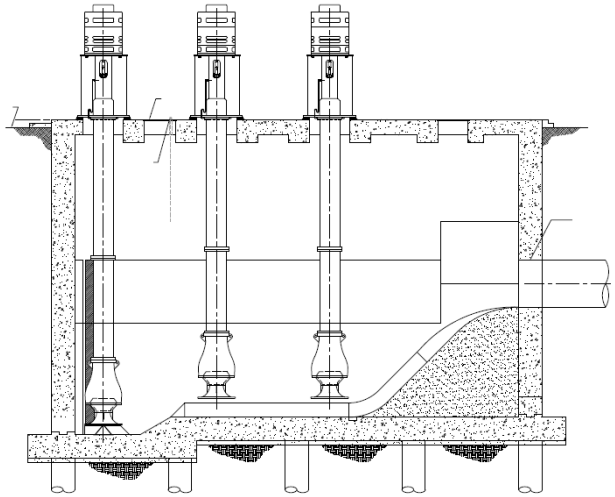

Trench Type Wet Well

- Suitable for Different Pump Types/Arrangements
  - Wet Pit or Dry Pit/Wet Pit
  - Pumps
    - VTSH
    - Submersible
    - Non-Clog Centrifugal
- Suitable for Different Fluids
  - Clean Water
  - Activated Sludge
  - Raw Wastewater

Dallas Water Utilities Central WWTP Influent Pump Station (335MGD initial capacity, 425MGD ultimate capacity)

Trench Type Wet Well

Advantages

-Superb Hydraulic Environment for Pump Intakes

-Minimum Footprint Size

-Small Floor Area (Minimum accumulation of sludge or grit)

-Ease and Quickness of Cleaning

Disadvantages

-Compact, Minimal Storage Capacity

-Increased Depth

-Clogging if Pumps Not Used

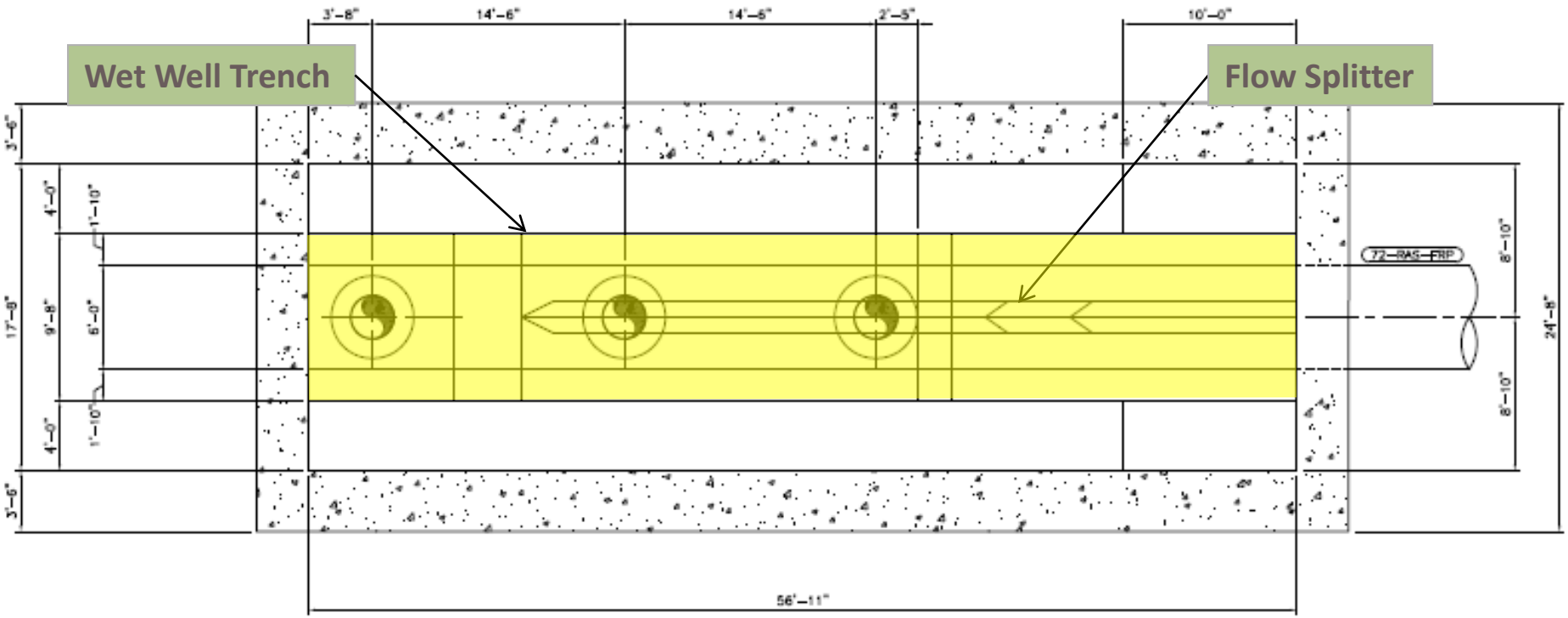

Wet Well Plan Elevation

Section Views

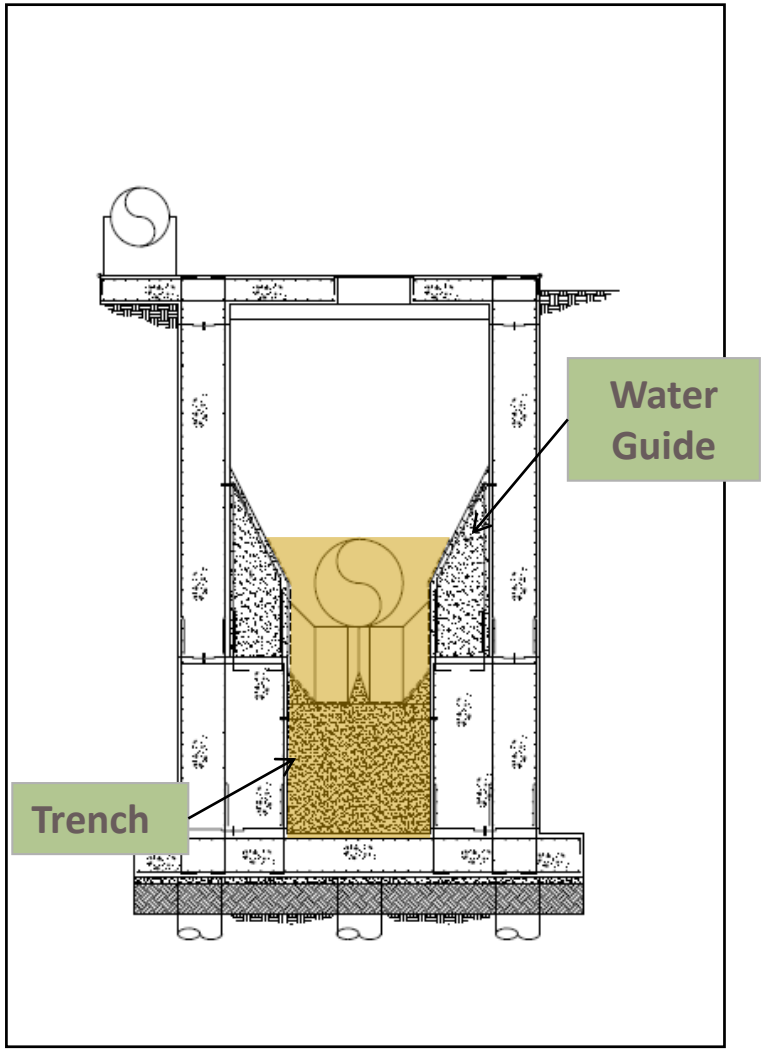

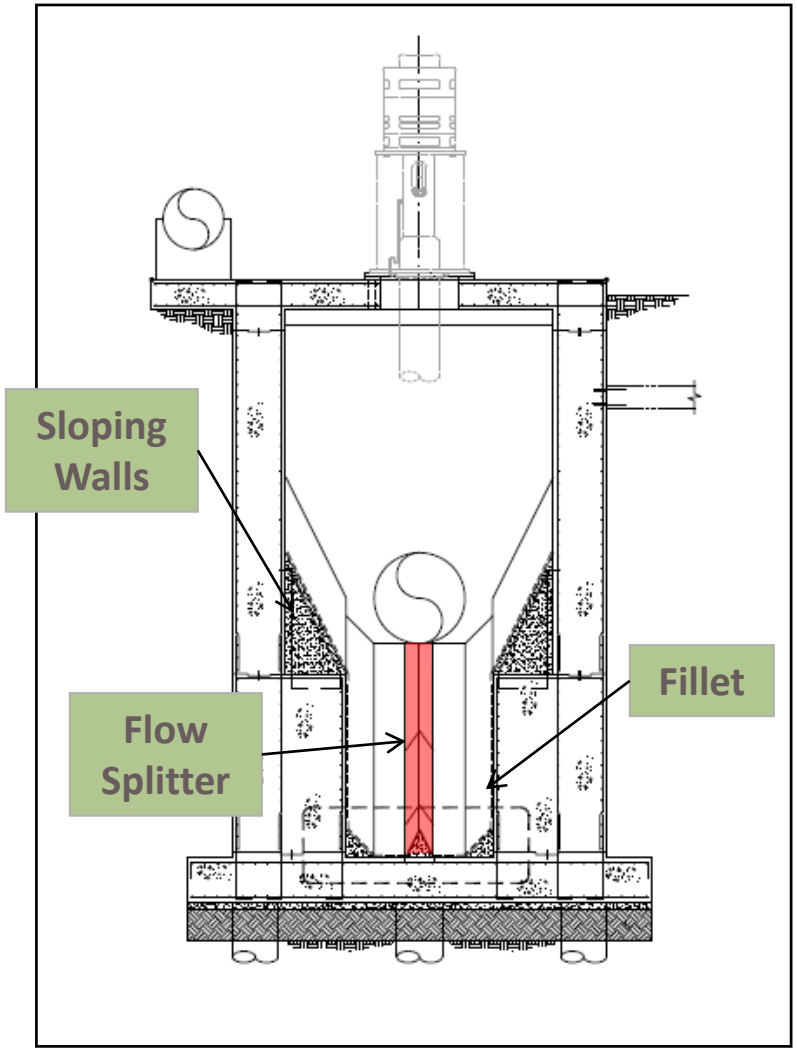

Section Views

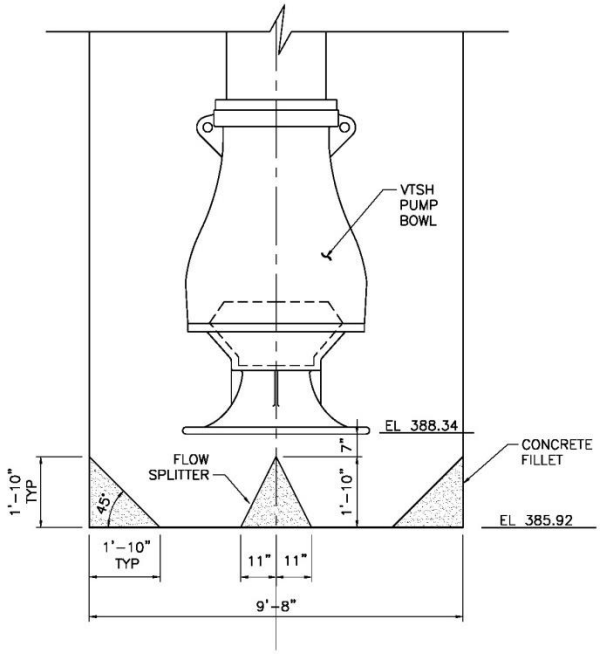

SECTION CUT OF FLOW SPLITTER

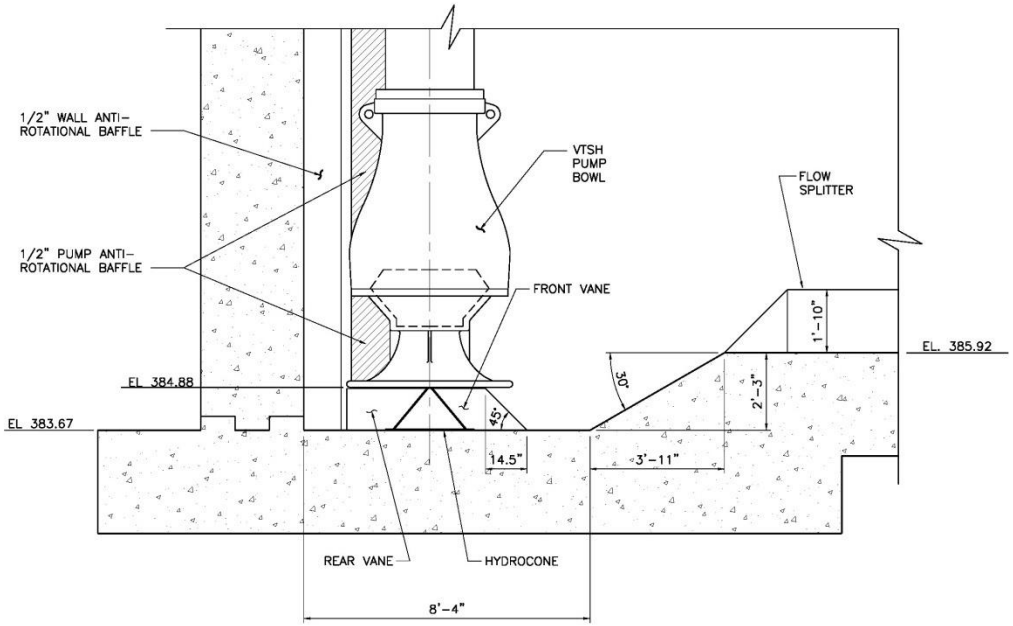

HYDROCONE AND REAR VANE

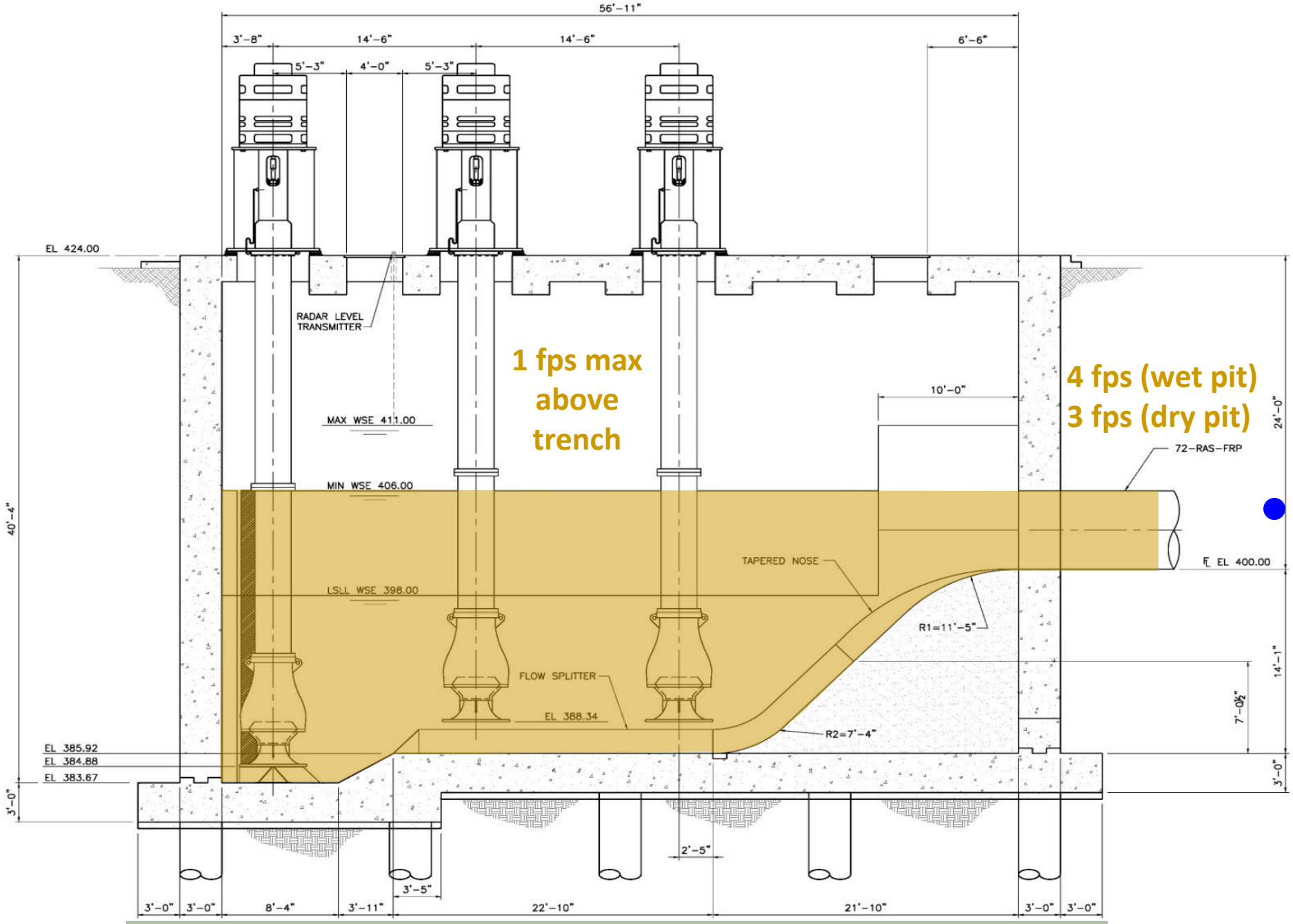

Illustrative Section of Trench Type Wet Well Pump Station – Normal Operation

Self Cleaning Cycle

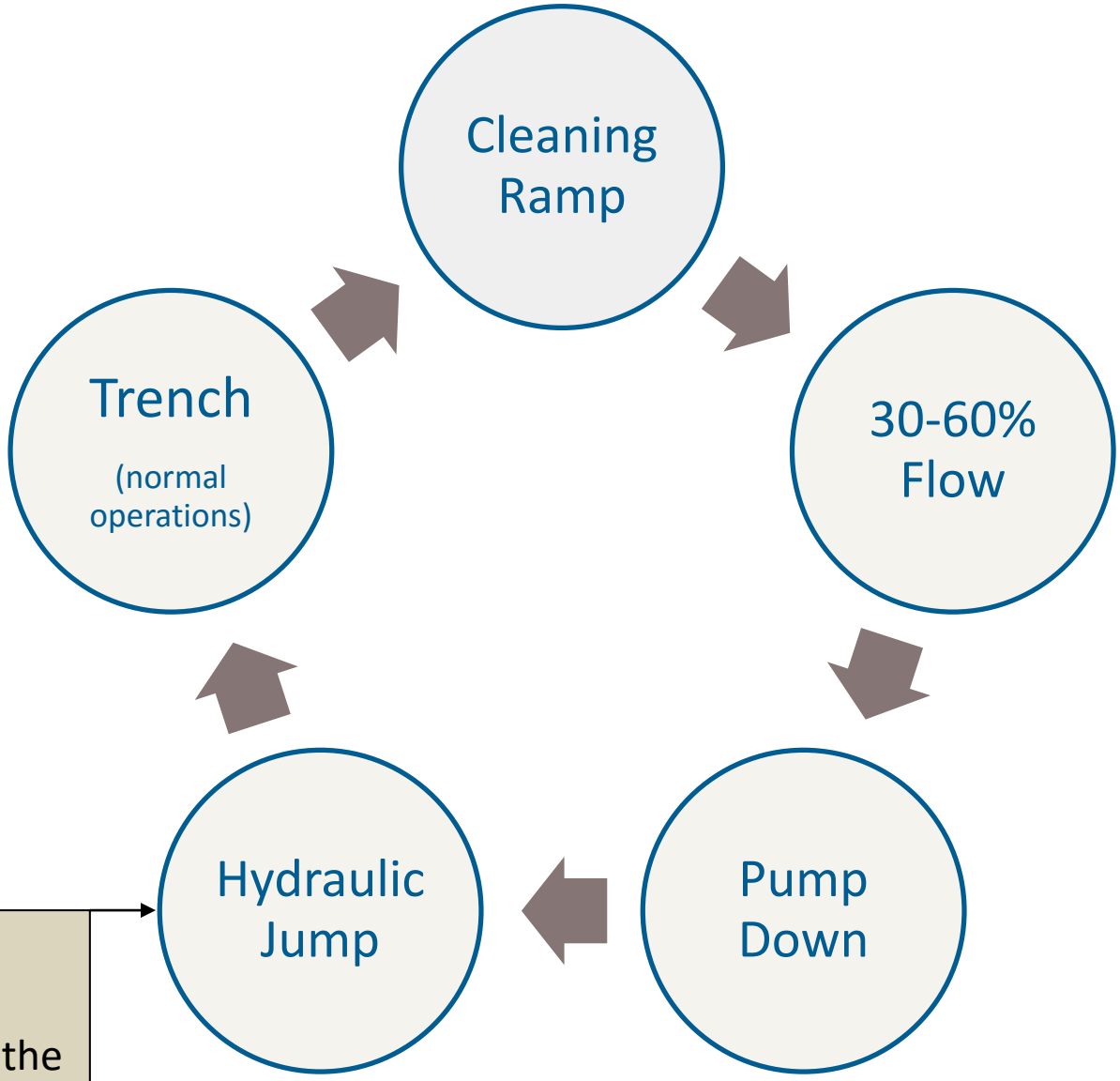

Mixes sludge and scum into a mass that is ejected by the last pump.

Cleaning Ramp

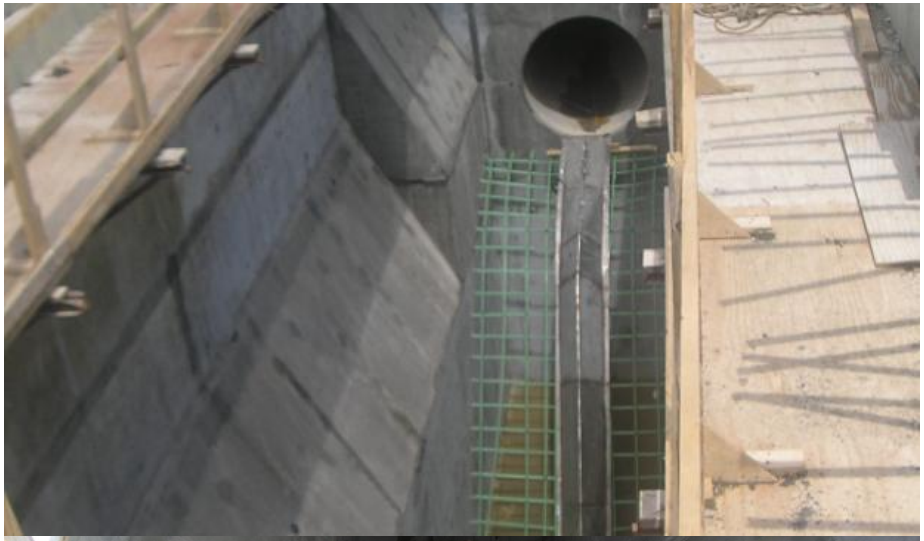

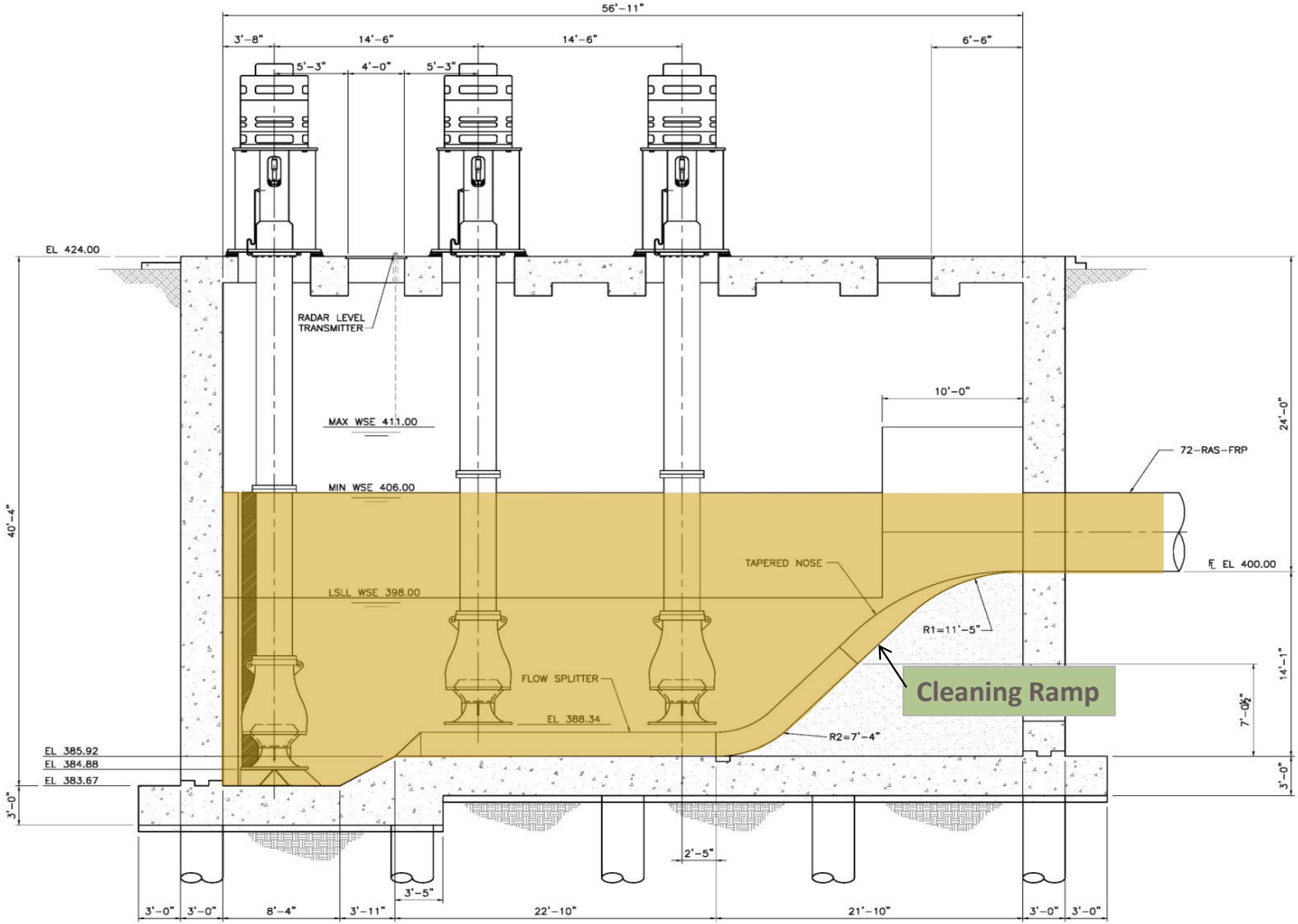

Illustrative Section of Pump Station – Cleaning Cycle (Pump Down)

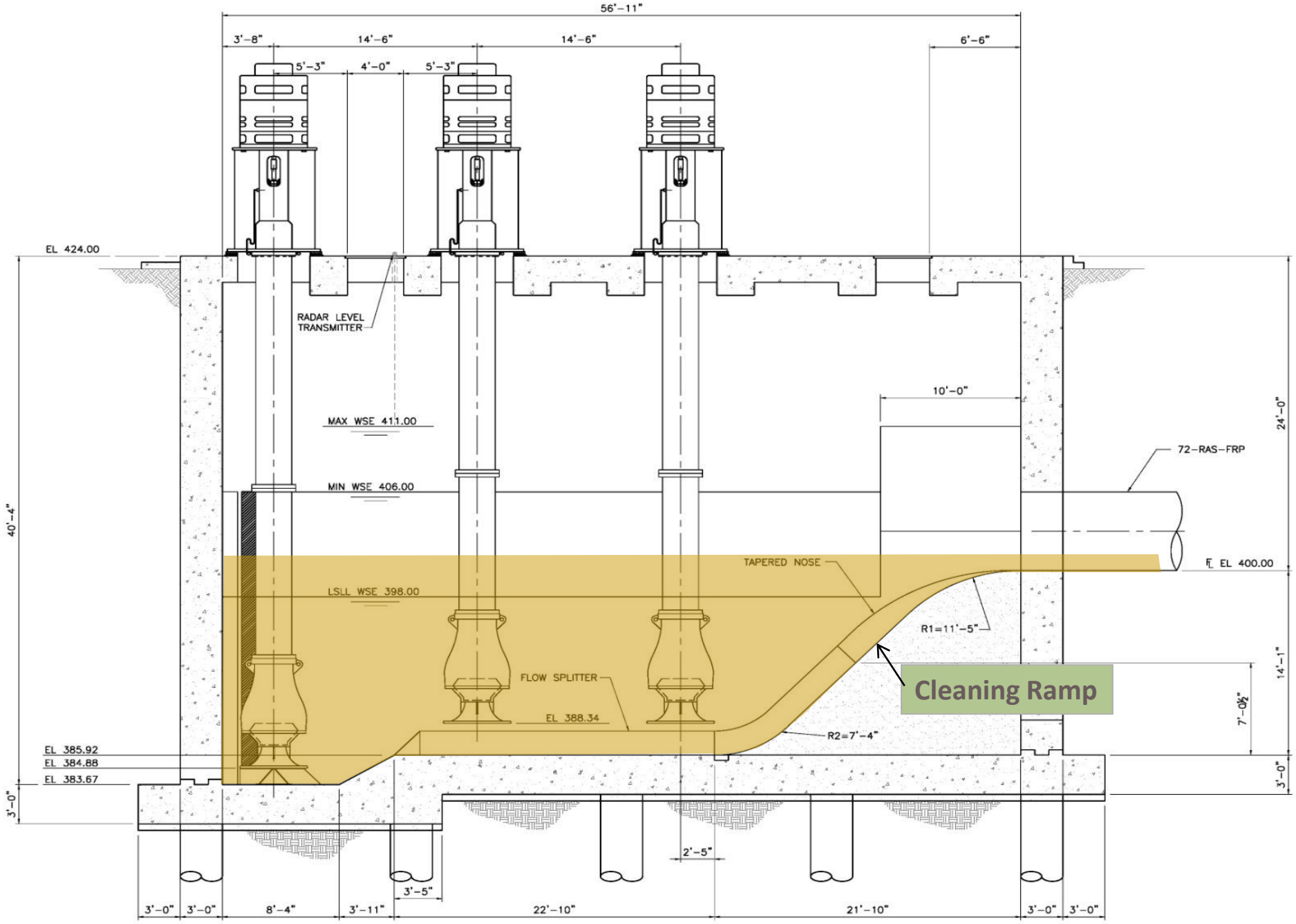

Illustrative Section of Pump Station – Cleaning Cycle (Pump Down)

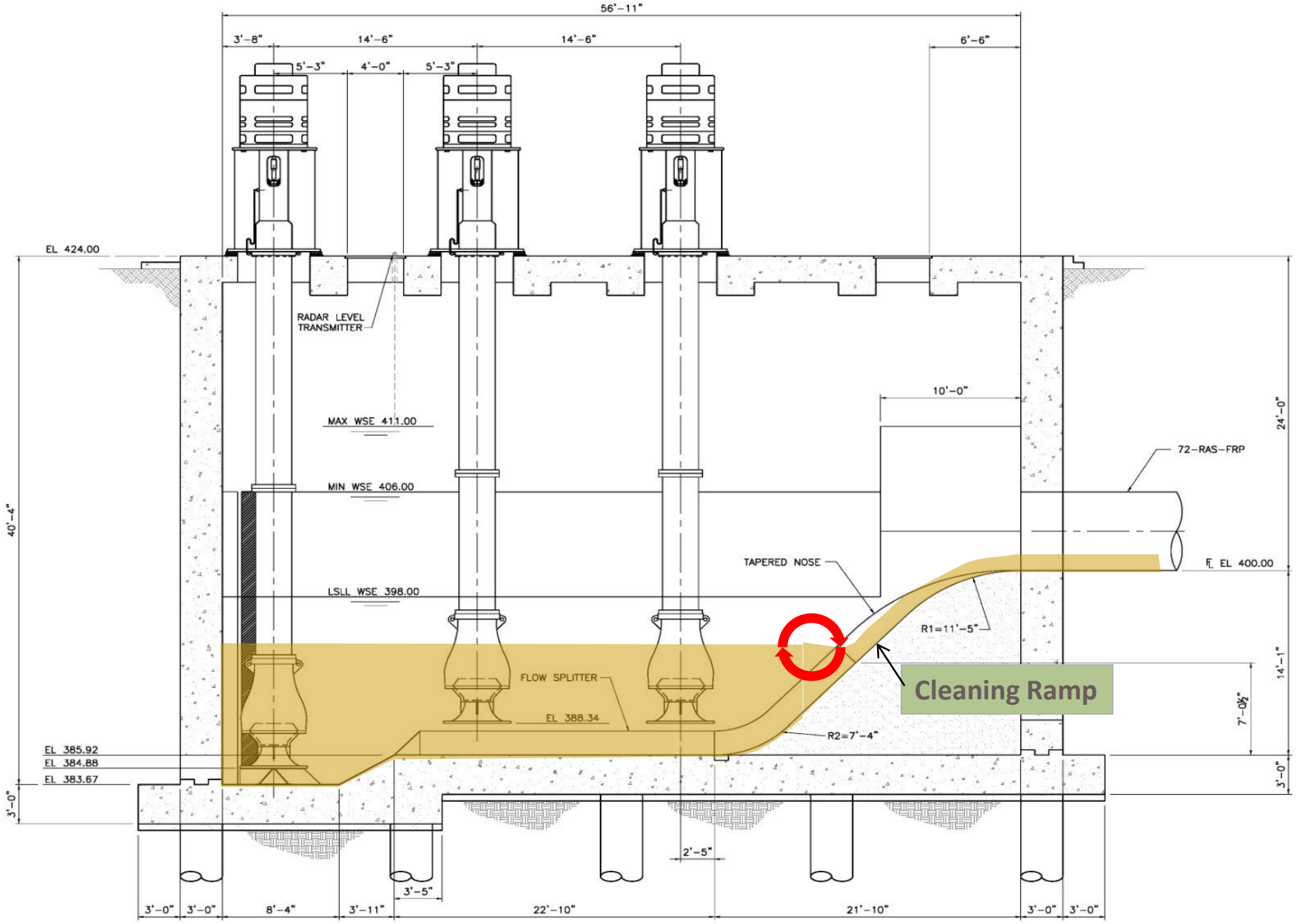

Illustrative Section of Pump Station – Cleaning Cycle (Pump Down)

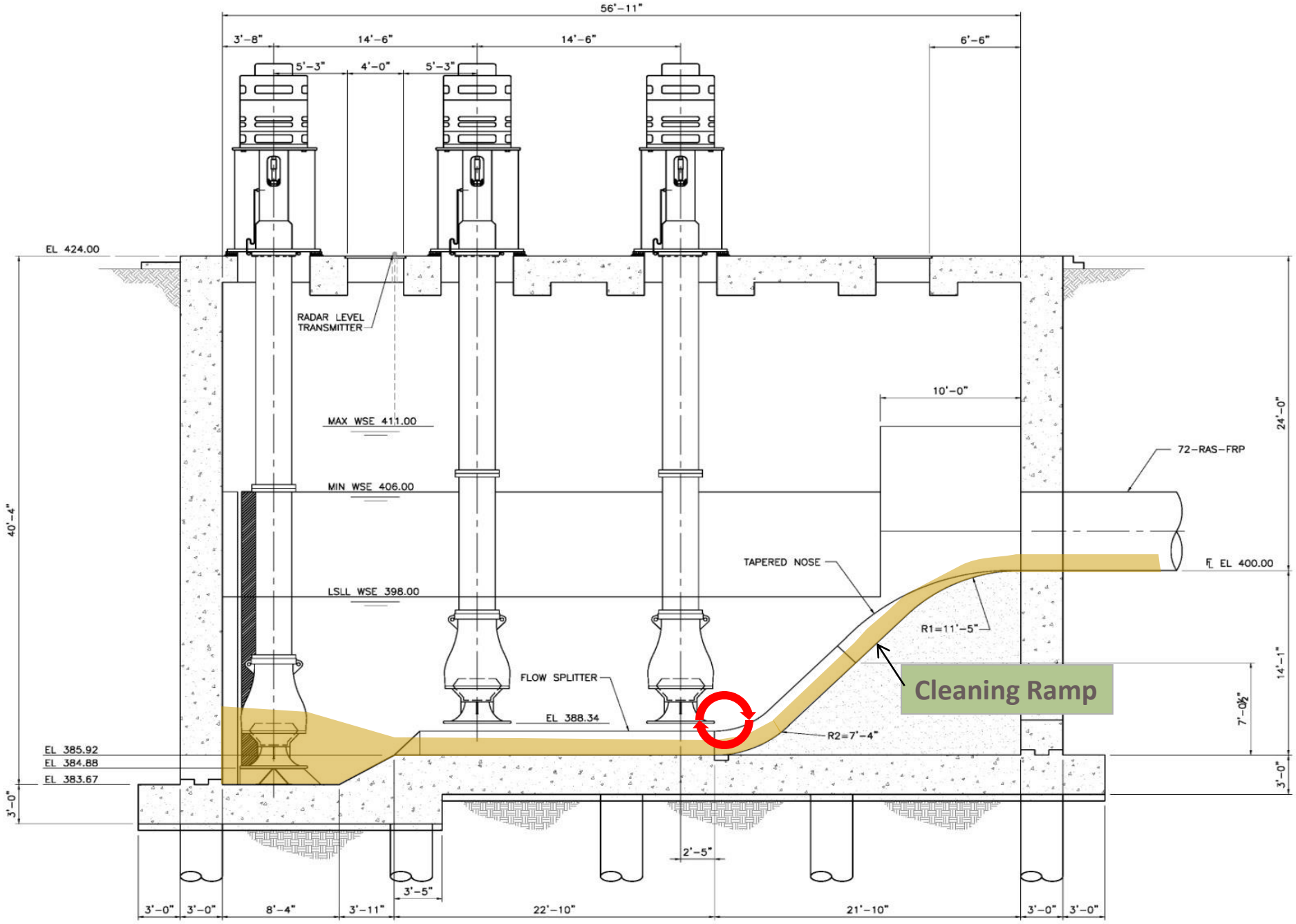

Illustrative Section of Pump Station – Cleaning Cycle (Pump Down)

Cleaning Sequence

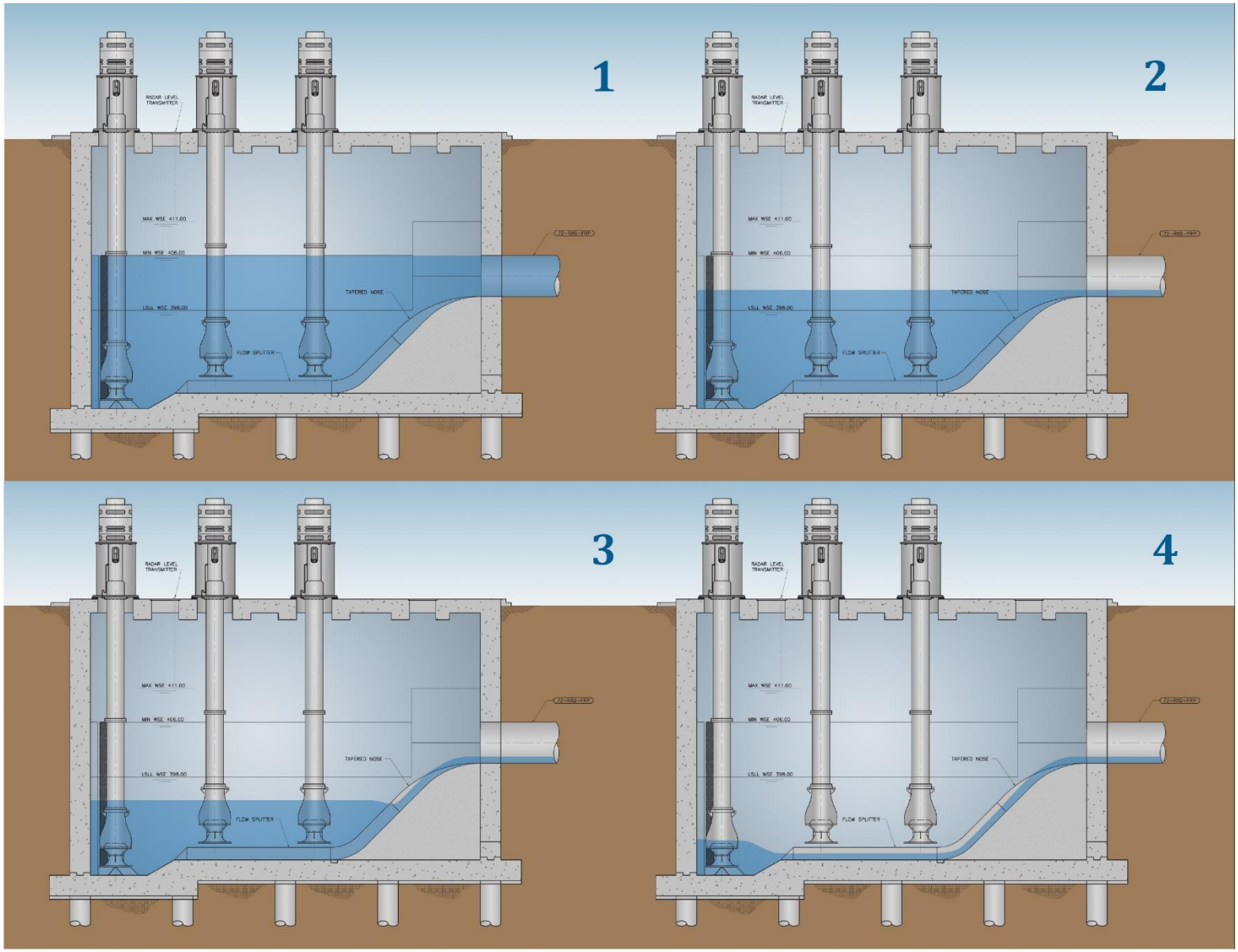

Case Study #1

- Trinity River Authority
  - CRWS Treatment Plant
- Design and Construction of Pump Station 13B
- Fluid of Interest: Return Activated Sludge (RAS)
  - Final Clarifiers – Traveling Bridge Suction Clarifiers
  - Thin Sludge
- RAS Firm Capacity – 200 MGD for WWTP
  - **New PS-13B – 50 MGD (North Plant, Trains 4-6)**
    - **3 pumps (200HP)**
    - **30-inch diameter columns**
    - **36-foot overall shaft length**
  - Downrated PS-13 – 50 MGD (North Plant, Trains 1-3)
  - Uprated PS-13A – 100 MGD (South Plant, Trains 7-12)

Pump Station Evaluation

- Dry-Pit/Wet-Pit
  - Horizontal Non-Clog Centrifugal Pumps
    - PS-13 and PS-13A
  - Vertical Non-Clog Centrifugal Pumps
    - PS-6 and PS-6A

- Wet-Pit
  - Vertical Turbine Solids Handling Pumps (VTSH)

Vertical Non-Clog Centrifugal Pumps

Horizontal Non-Clog Centrifugal Pump

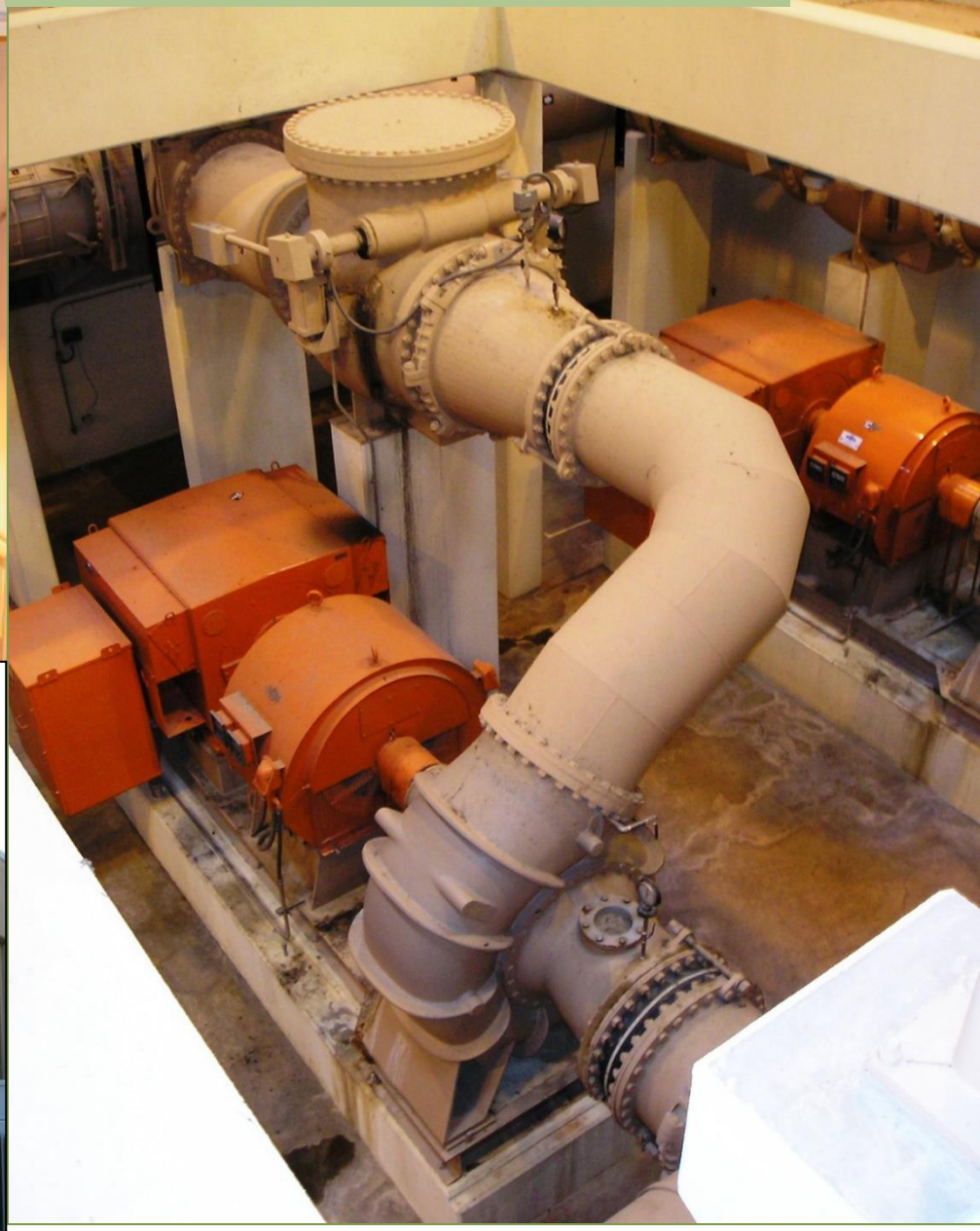

Pump Station 13-A

City of Phoenix, 23rd Ave. WWTP
(36-inch VTSH Pumps)

Limitations at PS-13B Site

- 60-inch Final Clarifier Effluent Line
- 84-inch Primary Clarifier Effluent Line
- Electrical Duct Bank
- Caustic Soda Bank
- 2-inch to 12-inch lines
- 12-foot roadway

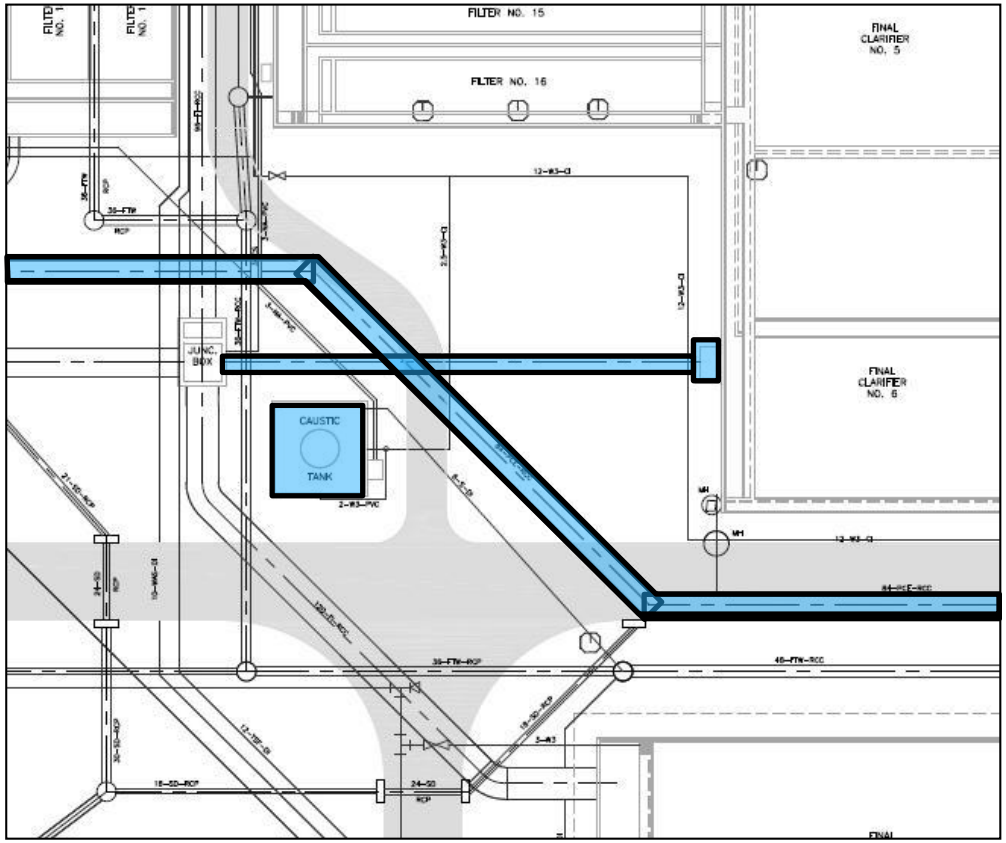

Existing Structures and Utilities

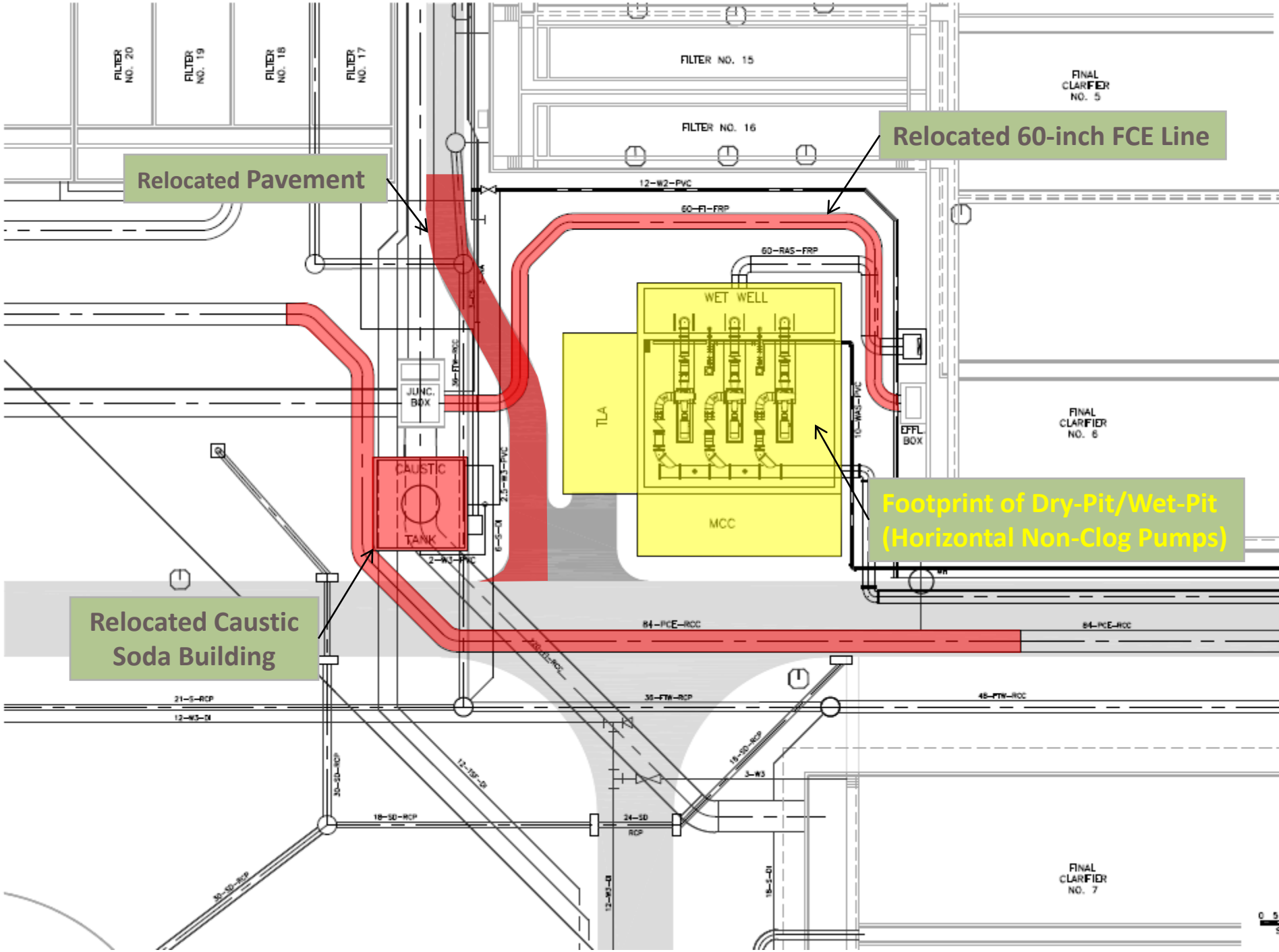
Relocated Pavement
Relocated 60-inch FCE Line
Footprint of Dry-Pit/Wet-Pit (Horizontal Non-Clog Pumps)
Relocated Caustic Soda Building
FILTER NO. 20
FILTER NO. 19
FILTER NO. 18
FILTER NO. 17
FILTER NO. 15
FILTER NO. 16
FINAL CLARIFIER NO. 5
FINAL CLARIFIER NO. 6
FINAL CLARIFIER NO. 7
WET WELL
TLA
MCC
JUNC. BOX
CAUSTIC TANK
EFFL BOX
12-W2-PVC
60-FI-FRP
60-RAS-FRP
10-RAS-PVC
84-PCE-RCC
21-S-RCP
12-W3-DI
36-FTW-RCP
48-FTW-RCC
30-SD-RCP
18-SD-RCP
24-SD RCP
3-W3
12-W3-DI
18-S-DI

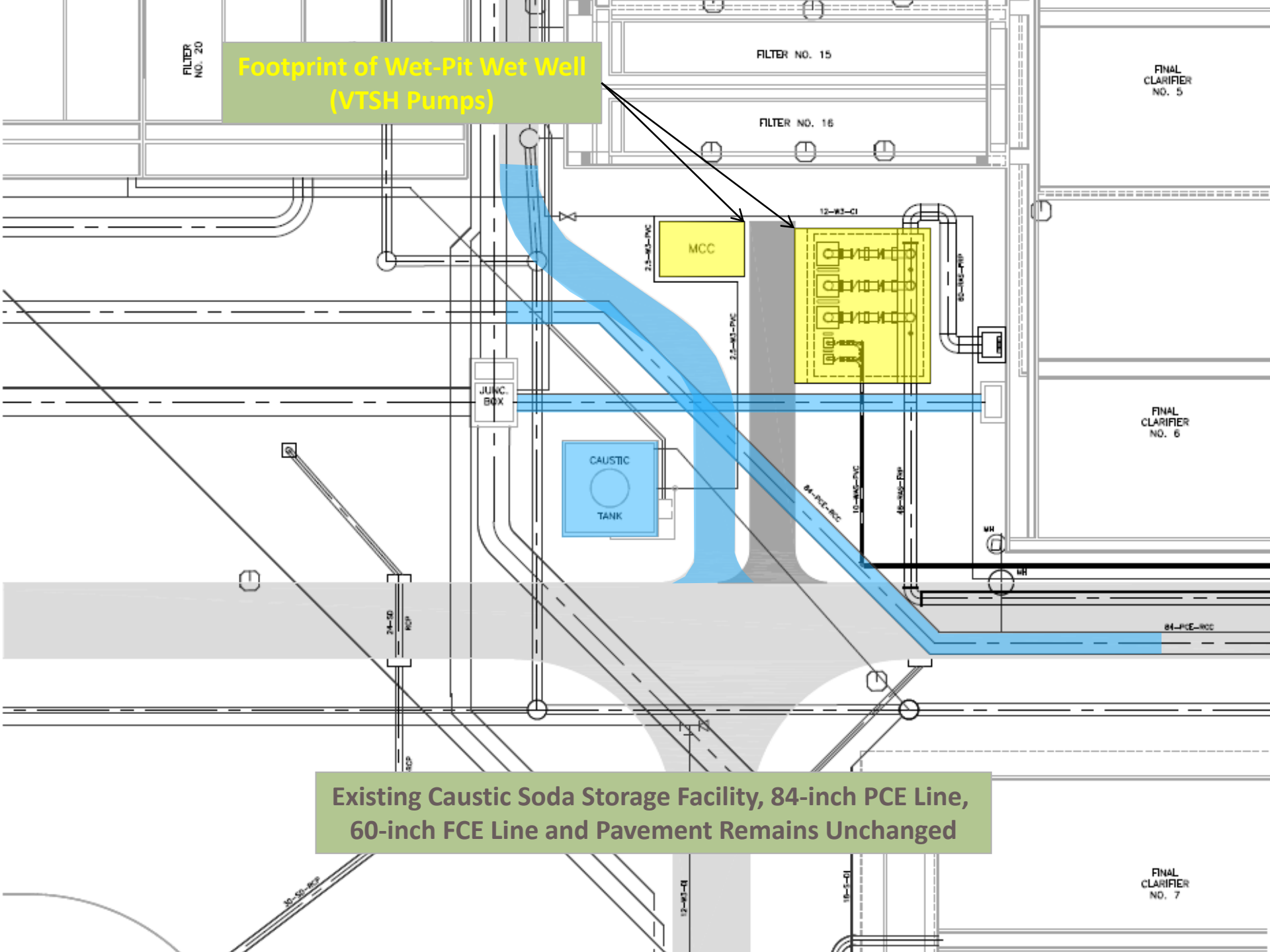
Footprint of Wet-Pit Wet Well
(VTSH Pumps)
FILTER NO. 20
FILTER NO. 15
FILTER NO. 16
FINAL CLARIFIER NO. 5
FINAL CLARIFIER NO. 6
FINAL CLARIFIER NO. 7
MCC
JUNC. BOX
CAUSTIC
TANK
Existing Caustic Soda Storage Facility, 84-inch PCE Line,
60-inch FCE Line and Pavement Remains Unchanged

Dry Pit vs. Wet Pit

Pump Station Type	Length/Width	Depth	Pump Cost ($)*	OPCC ($)**
Horizontal Non-Clog Centrifugal Pump Station (Wet-Pit/Dry-Pit)	67’/65’	26’	$915,000	$10.9 million
Vertical Non-Clog Centrifugal Pump Station (Wet-Pit/Dry-Pit)	59’/54’	~35’	$945,000	$11.4 million
VTSH Pump Station (Wet Pit)	**49’/43’**	**29’**	**$1,718,000**	**$9.5 million**

*Total Pump Cost for Three (3) Pumps
**OPCC: Opinion of Probable Cost

Wet Pit vs Trench Type

Pump Station Type	Length/Width	Depth	Pump Cost ($)*	OPCC ($)**
Wet-Pit Pump Station	49’/43’	29’	$1,718,000	$9.5 million
Trench Type Wet Well Pump Station	**57’/18’**	**38’**	**$1,718,000**	**$8.5 million**

* Total Pump Cost for 3 Pumps
** OPCC: Opinion of Probable Construction Cost

Site Plan – RAS Pump Station 13B

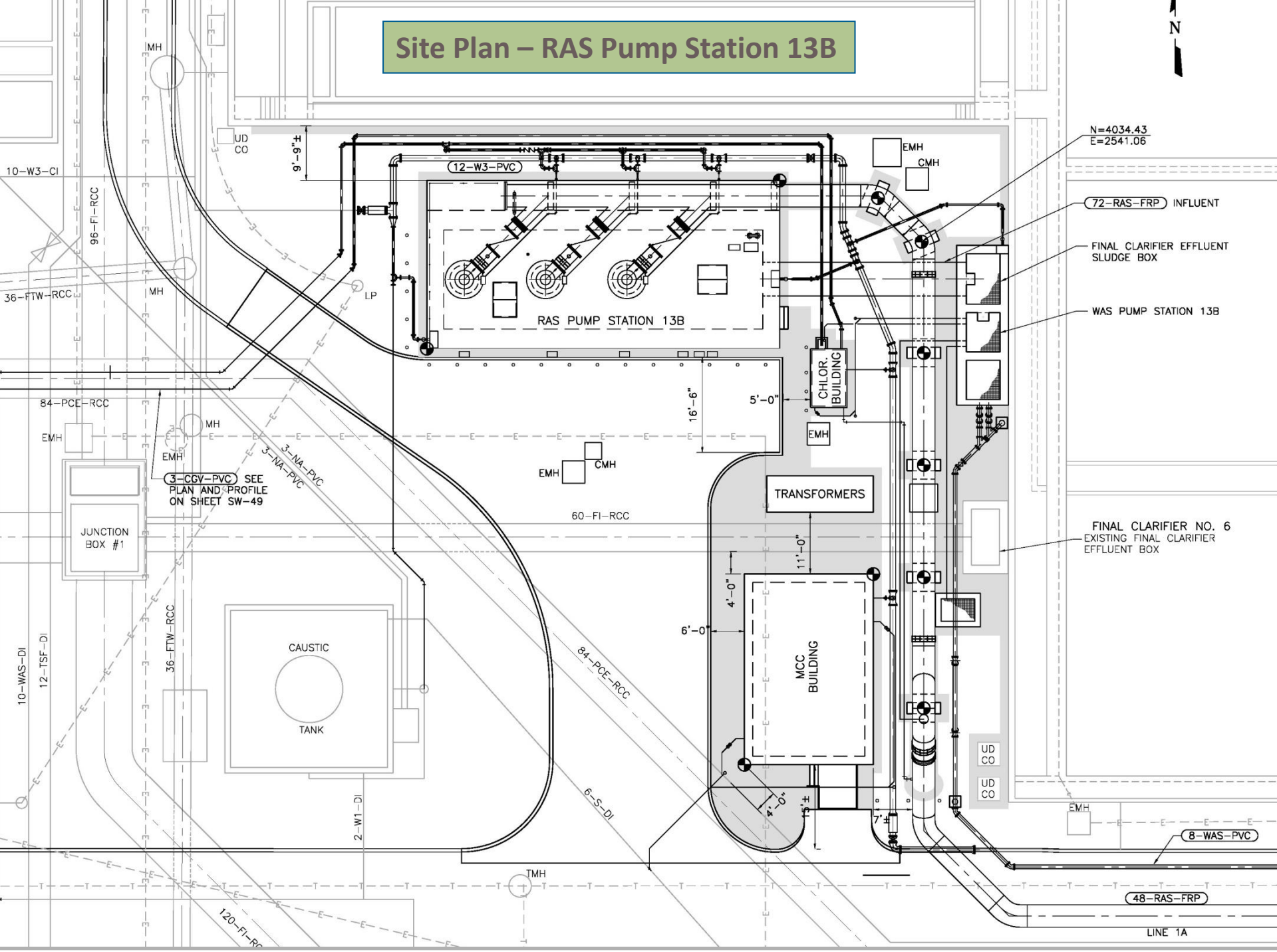

Construction Photos

Construction Photos

Construction Photos

Construction Photos

Construction Photos

Construction Photos

Construction Photos

Construction Photos

Construction Photos

Construction Photos

Construction Photos

Construction Photos

Acknowledgements

- Trinity River Authority of Texas
- ANSI/HI (Hydraulic Institute) Pump Standards, 1998/2012
- *Pumping Station Design,* 3rd Edition
  - Editor-in-Chief: Garr M. Jones, P.E.
  - Co-Editors: Dr. Robert L. Sanks, Ph.D., P.E.
    Dr. George Tchobanoglouos, Ph.D., P.E.
    Bayand E. Bosserman II, P.E.
- ***Dr. Robert L. Sanks, Ph.D., P.E. (Quality Control)***
- Dr. Joel E. Cahoon, Ph.D., P.E., Montana State University

Case Study #2

- Dallas Water Utilities
  - Central Wastewater Treatment Plant
- Design and Construction of Influent Pump Station
- Fluid of Interest: Raw Sewage
  - Coarse screens upstream (1-inch spacing)
- Firm Capacity – 335 MGD (current), 425MGD (expanded)
  - 6 pumps (2, 1000HP and 4, 800HP)
  - 42-inch diameter columns
  - 62-foot overall shaft length
  - 20-80MGD range per pump (VFDs)

Trench-Type with Dry Pump Pit

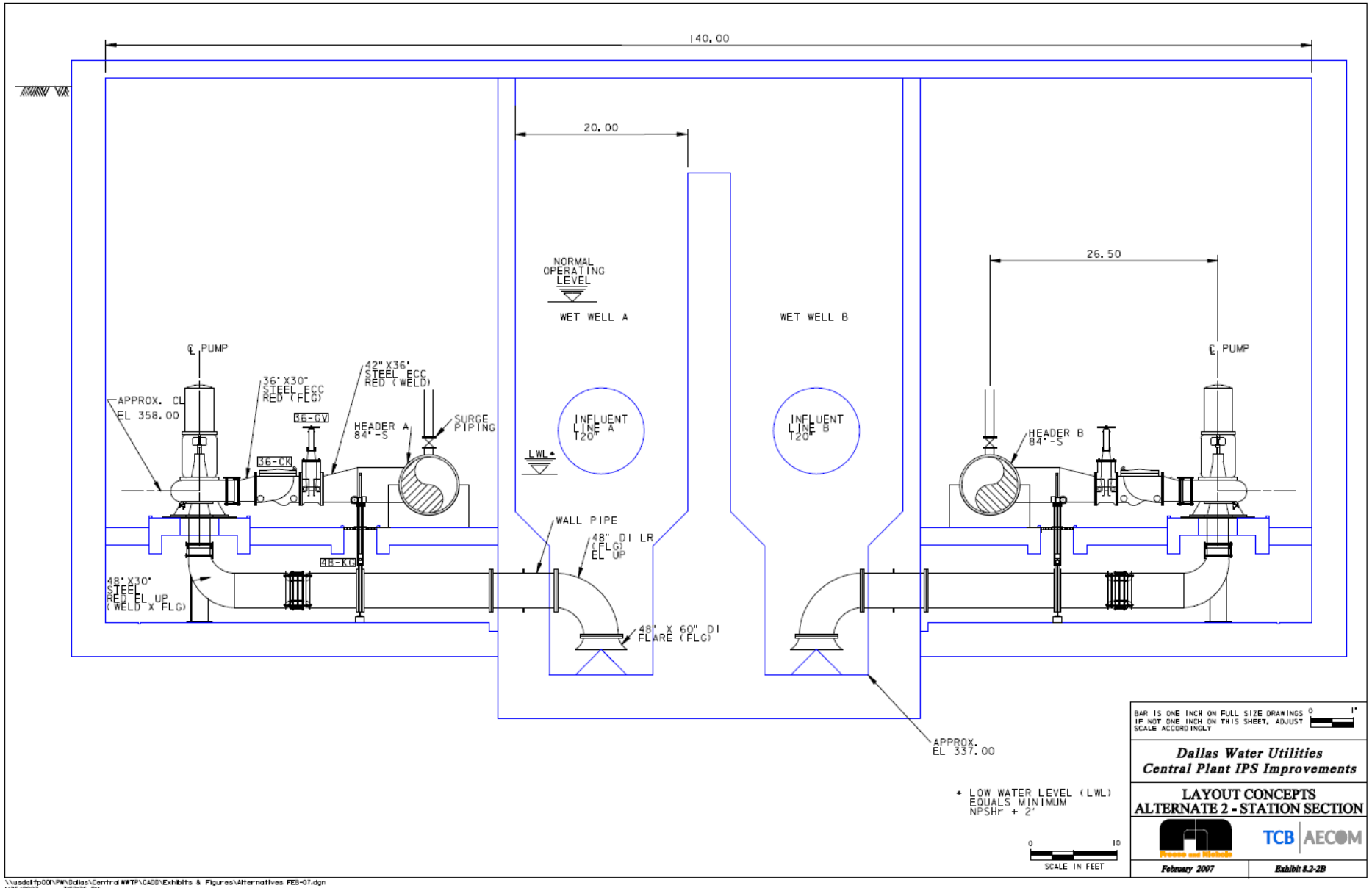

Trench-Type with VTSH Pumps

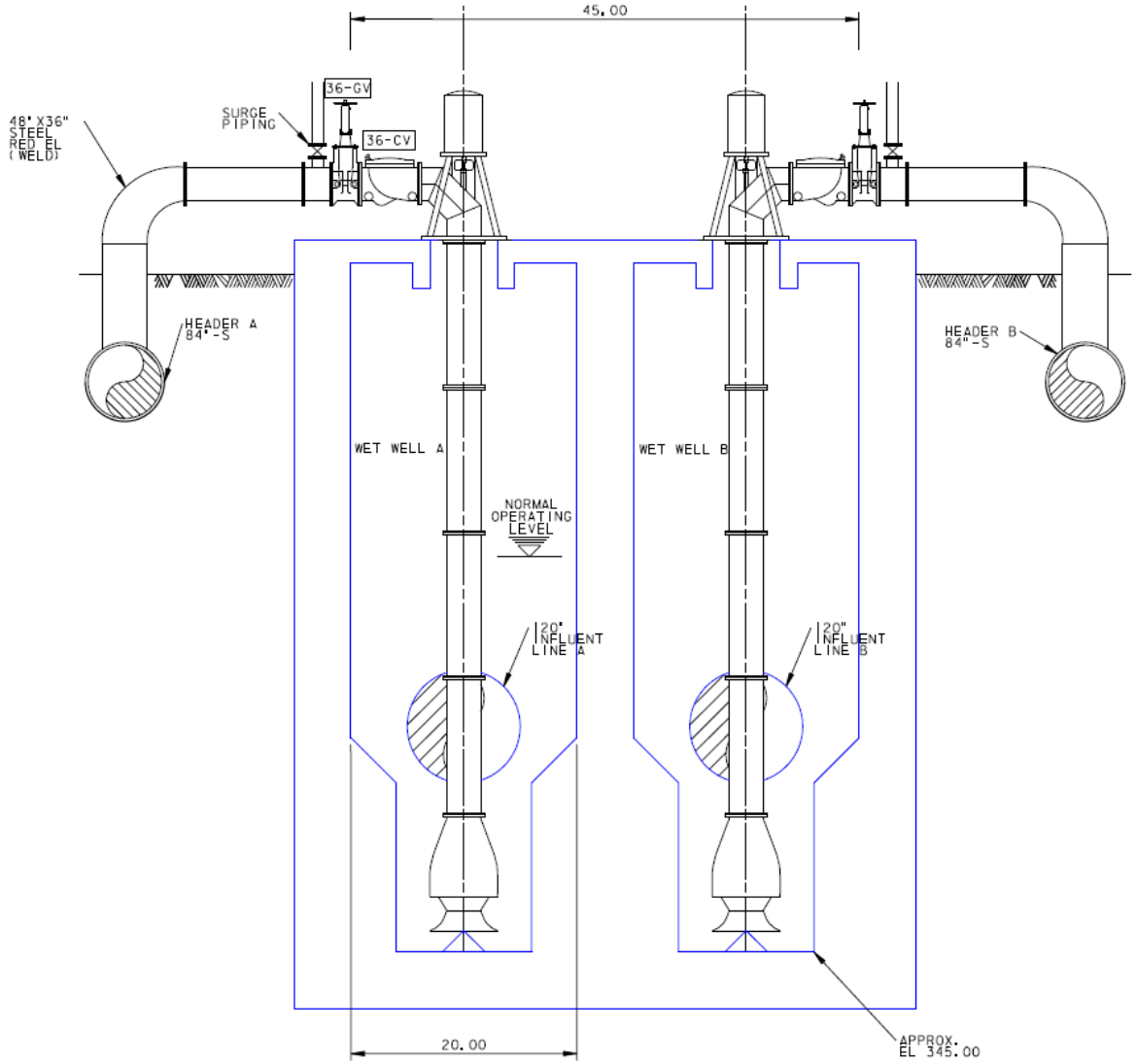

* LOW WATER LEVEL (LWL) EQUALS MINIMUM NPSHr + 2'

0 10
SCALE IN FEET

BAR IS ONE INCH ON FULL SIZE DRAWINGS IF NOT ONE INCH ON THIS SHEET, ADJUST SCALE ACCORDINGLY 0 1"

Dallas Water Utilities
Central Plant IPS Improvements

LAYOUT CONCEPTS
ALTERNATE 4 - STATION SECTION

Process and Methods
TCB | AECOM

February 2007 | Exhibit 8.2-4B

\\usdal1p001\PW\Dallas\Central WWTP\CADD\Exhibits & Figures\Alternatives FES-07.dgn
1/25/2007 3:54:33 PM

Pump Station Section

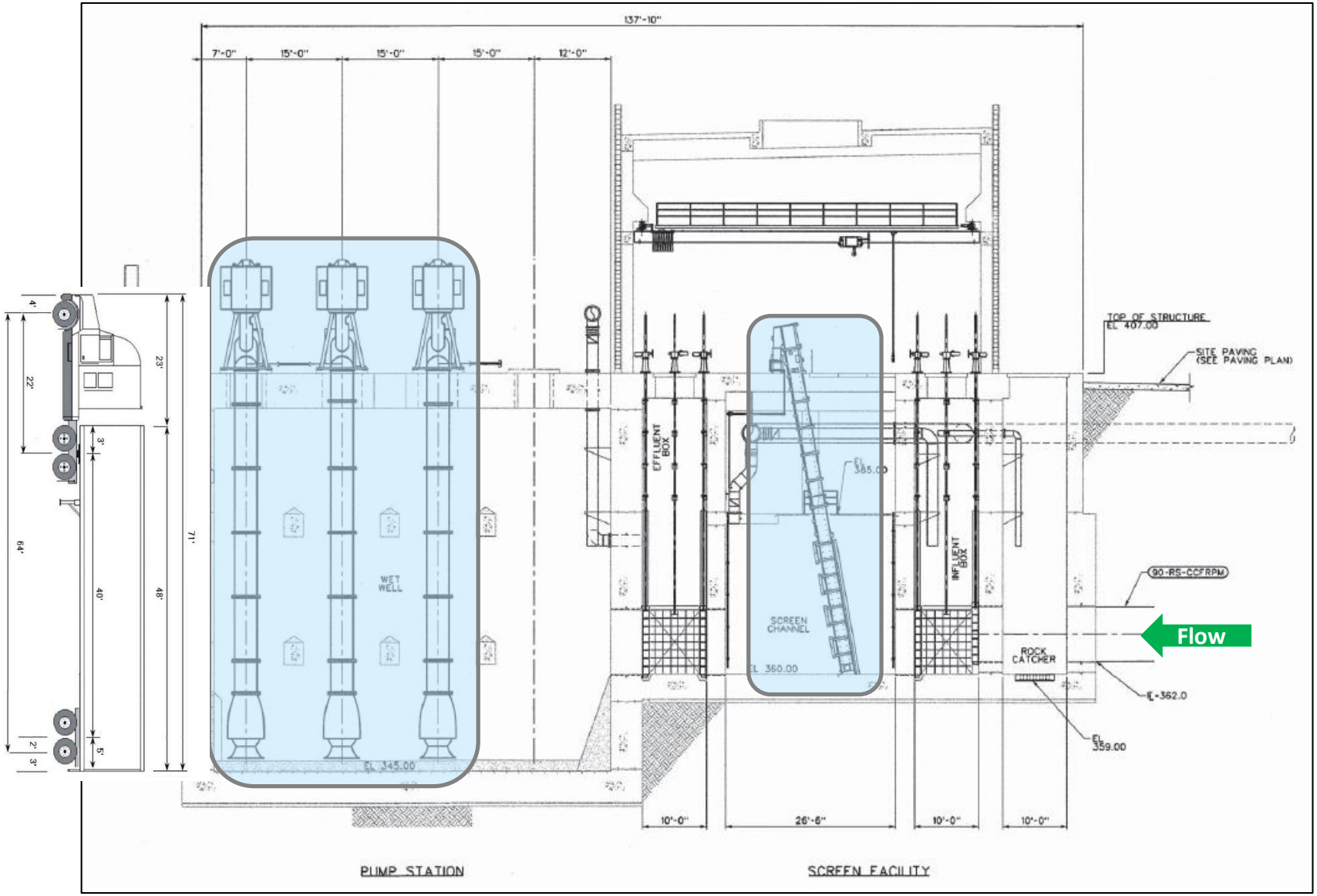

Case Study #2

Ten Years in the Making

Case Study #3

- City of Midlothian
  - Water Treatment Plant
- Design and Construction of New WTP
- Fluid of Interest: Partially Treated Water
  - Pumped water feeds membranes
- Firm Capacity – 9MGD (firm), 18MGD (ultimate)
  - 3 initial pumps (4.5MGD each)
  - 5 ultimate pumps
  - 20-foot depth

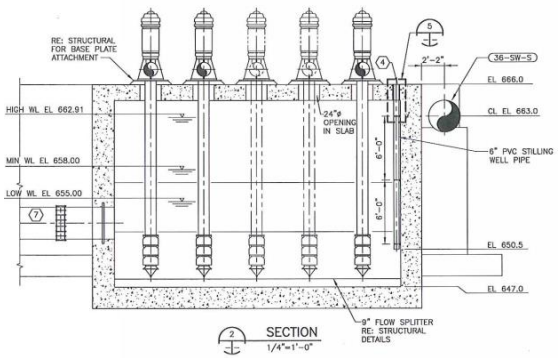

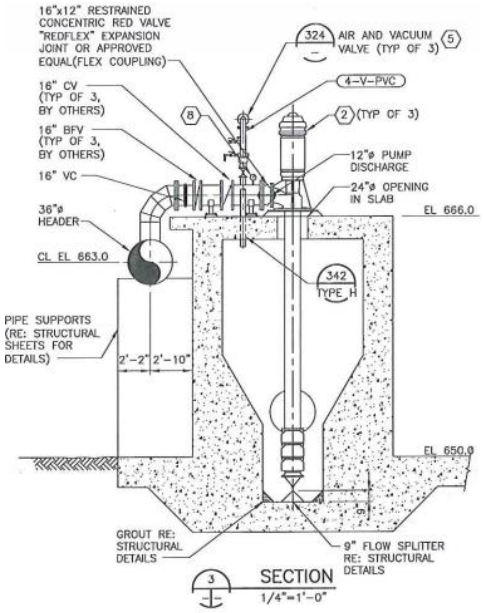

Case Study #4

- City of Fort Worth
  - Collection System
- Design of Lake Arlington Lift Station
  - Construction – November 2019
  - Completion – March 2022
- Fluid of Interest: Raw Sewage
- Firm Capacity – 40 MGD (firm), 80MGD (ultimate)
- Trench Type Wet Well
  - Elimination of wet well reduces the size of the site
  - Self-cleaning design reduces maintenance costs
  - VFDs allow pumps to run efficiently through range of required flows

Is this the right design for you?

- Your Conditions
  - Limited on Space?
  - Solids/grit problem?
  - Tired of maintenance intensive cleaning?
  - Don’t prefer dry-pit/wet-pit?

- Pre-Design Evaluation
  - Cost Analysis (Life Cycle)
  - Benefits Analysis
  - Reference Calls
  - Site Visits
  - Comfort Level

Decision Making Examples
Case Studies #1 and #2

- Client Concerns
  - Lacking Comparable Size Installations
  - Staff Unfamiliar with Equipment
- Increasing their Comfort Level with the Equipment
  - Site Visits to Arizona and Kansas
  - Extended Warranty
  - Single Point of Responsibility
  - Witness Performance Testing
  - Contracted Maintenance (1st observe and learn)
  - Vibration Monitoring
  - Smith Pump Seminar
- Largest Driver Tipping the Risk vs. Benefit Scale
  - Significant Capital Cost Savings (Ex: DWU $16 Million over traditional design)

Closing Remarks & Questions

<u>Contact Information</u>
Trooper Smith
Email: trooper.smith@freese.com